SKIDPRO ATTACHMENTS

V-Blade

Operation and Maintenance Manual



Revision Date: November 2026

Skid Pro Attachments
PO Box 982
Alexandria, MN 56308
Toll Free: 877-378-4642

www.skidpro.com

Contents

INTRODUCTION **2**
To the Purchaser 2
Illustrations 2
Direction Reference 2
Serial Plate 2
SAFETY PRECAUTIONS **3**
Before Operation 3
Children 3
Notice 4
Safety Precautions – Snow V-Blade 4
SNOW V-Blade OPERATION **5**
THE SKID STEER **6**
General Information 6
Operating the Skid Steer 6
During Operation 7
Roll-Over Protective Structure (ROPS) During Operation 7
MAINTENANCE **8**
TRANSPORTING **9**
STORAGE **9**
OPERATION **10**
General Preparation 10
Engine Speed 10
Engaging the Drive Mechanism 10
SNOW V-Blade PARTS **10**
TORQUE SPECIFICATION TABLE **15**
General Specification Table 15
SKID PRO ATTACHMENT WARRANTY **16**

INTRODUCTION

To the Purchaser

All products are designed to give safe, dependable service if they are operated and maintained per instructions. Read and understand this manual before operation.

This manual has been prepared to assist the owner and operators in the safe operation and suitable maintenance of the equipment. The information was applicable to products at the time of manufacture and does not include modifications made afterwards.

Read and understand this operator's manual before attempting to put equipment into service. Familiarize yourself with the operating instructions and all the safety recommendations contained in this manual and those labeled on the equipment and on the skid steer. Follow the safety recommendations and make sure that those with whom you work follow them.

Illustrations

The illustrations may not necessarily reproduce the full detail and the exact shape of the parts or depict the actual models, but are intended for reference only.

Direction Reference

All references to right and left, forward or rearward, are from the operator's seat, facing the steering wheel.

Serial Plate

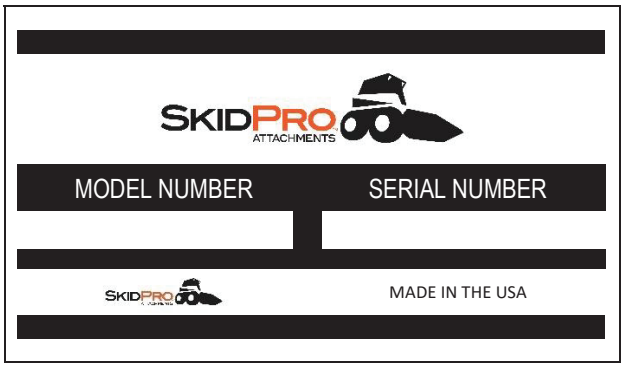

To assist your dealer in handling your needs, please record hereafter the model number and the serial number of your equipment and skid steer. It is also advisable to supply them to your insurance company. It will be helpful in the event that an equipment or skid steer is lost or stolen.

SKID STEER **IMPLEMENT**

MODEL: _____

SERIAL NUMBER: _____

DATE OF PURCHASE: _____

DEALER NAME: _____

SAFETY PRECAUTIONS

SAFETY FIRST

This symbol, the industry's "Safety Alert Symbol", is used throughout this manual and on labels on the machine itself to warn of the possibility of personal injury. Read these instructions carefully. It is essential that you read the instructions and safety regulations before you attempt to assemble or use this unit.

DANGER:	Indicates an immediate hazardous situation which, if not avoided, will result in death or serious injury.
WARNING:	Indicates a potentially hazardous situation which, if not avoided, will result in death or serious injury.
CAUTION:	Indicates a potentially hazardous situation which, if not avoided, may result in minor or moderate injury.
IMPORTANT:	Indicates that equipment or property damage could result if instructions are not followed.
NOTE:	Gives helpful information.

All products are designed to give safe, dependable service if they are operated and maintained according to instructions. **Read and understand this manual before operation**. It is the owner's responsibility to be certain anyone operating this product reads this manual, and all other applicable manuals to become familiar with this equipment and all safety precautions. Failure to do so could result in serious personal injury or equipment damage. If you have any questions, consult your dealer.

Before Operation

Children

Tragic accidents can occur if the operator is not alert to the presence of children. Children are generally attracted to machines and work being done. Never assume children will remain where you last saw them.

1. Keep children out of the operating area and under the watchful eye of another responsible adult.
2. Be alert and turn machine off if children enter the work area.
3. Before and when backing, look behind for small children, use care when approaching blind corners.
4. Never carry children while operating the machine. They may fall off and be seriously injured or interfere with the safe operation of the machine.
5. Never allow children to play on the machine or attachment even when they are turned off.
6. Never allow children to operate the machine even under adult supervision.

Notice

A safe operator is the best assurance against accidents. All operators, no matter how experienced they may be, should read this operator's manual and all other related manuals before attempting to operate the equipment. Please read the following section and pay particular attention to all safety recommendations contained in this manual and those labeled on the equipment and on the skid steer.

Safety Precautions – Snow V-Blade

1. Read and understand this operator's manual and skid steer operator's manual. Know how to operate all controls and how to stop the unit and disengage the controls quickly.
2. Never wear loose, torn, or bulky clothing around the skid steer and the snow V-Blade. It may catch on moving parts or controls, causing injury.
3. Before and during use, thoroughly inspect the area where the equipment is to be used and remove all objects that may cause damage to the equipment.
4. Set transmission to neutral and disengage clutch, if equipped, before starting the engine.
5. Do not operate equipment without protective clothing.
6. Never attempt to make any adjustments while engine is running. Read this manual carefully to acquaint yourself with the equipment as well as the skid steer operator's manual. Working with unfamiliar equipment can lead to accidents. Be thoroughly familiar with the controls and proper use of the equipment.
7. Keep all safety guards in place and verify hardware for proper tightening.
8. Check for moving parts excessive wear regularly. Replace worn parts with genuine parts.
9. Replace all missing, illegible, or damaged safety and warning decals. See list of decals in operator's manual.
10. Keep safety decals clean of dirt and grime.
11. Do not modify or alter this equipment or any of its components, any equipment or any of its components or any equipment function without first consulting your dealer.

SNOW V-Blade OPERATION

1. Before leaving the skid steer unattended, take all possible precautions. Park the skid steer/snow V-Blade on level ground, place the transmission in neutral, set the parking brake, disengage the Aux hydraulics, lower the equipment to the ground, place all levers including auxiliary control levers in neutral, shut off the engine and remove the ignition key.
2. Prior to operation mark all curbs, pipes, etc. that cannot be moved.
3. Be sure the Aux hydraulics switch/lever is in OFF position before starting engine.
4. Exercise extreme caution when operating on or crossing a gravel drive, walks, or roads. Stay alert for hidden hazards or traffic.
5. Do not carry passengers.
6. Keep clear of moving parts.
7. Park the skid steer/snow V-Blade on level ground, place the transmission in neutral, set the parking brake, disengage the Aux hydraulics, lower the equipment to the ground, place all control levers in neutral, shut off the engine, remove the ignition key and allow the moving parts to stop BEFORE and making any repairs, adjustments or inspections.
8. If the snow V-Blade starts to vibrate abnormally, disengage the Aux hydraulics, stop the engine immediately and check for cause. Excessive vibration is generally a sign of trouble.
9. Do not run the engine indoors except when starting engine and transporting attachment in or out of building. Carbon monoxide gas is colorless, odorless and deadly.
10. Do not attempt to operate on steep slopes. If operating on slopes is necessary, exercise extreme caution when changing direction.
11. Never operate snow V-Blade without safety protective devices in place.
12. Never operate machine at high transport speeds on a slippery surface.
13. Use extra caution when backing up.
14. Never operate the snow V-Blade without good visibility and lighting.
15. Prolonged exposure to loud noise can cause impairment or loss of hearing. Wear a suitable hearing device such as earmuffs or earplugs to protect against objectionable or uncomfortable noises.
16. Never allow anyone near the work area.

THE SKID STEER

General Information

1. Read the operator's manual carefully before using skid steer. Lack of operating knowledge can lead to accidents.
2. Do not permit anyone but the operator to ride on the skid steer. There is no safe place for passengers.

Operating the Skid Steer

1. Never run the skid steer engine in a closed building without adequate ventilation, as the exhaust fumes are very dangerous.
2. Adopt safe driving practice: Keep the parking brake on at all times during transportation.
3. Always drive at a safe speed relative to local conditions and ensure that your speed is low enough for an emergency stop to be safe and secure.
4. Reduce speed prior to turns to avoid the risk of overturning. Keep speed to a minimum.
5. Always keep the skid steer in gear to provide engine braking when going downhill. Do not coast.
6. Never allow an open flame near the fuel tank or battery.
7. Make sure the proper shields are installed when using the equipment and always replace the shields if damaged.
8. Park the skid steer/snow V-Blade on level ground, place the transmission in neutral, set the parking brake, disengage the Aux hydraulics, lower the equipment to the ground, place all levers including auxiliary control levers in neutral, shut off the engine and remove the ignition key BEFORE leaving the skid steer.
9. Never park or operate the skid steer on a steep slope. Avoid sudden uphill turns on steep slopes.
10. Use of counterweights for better traction and stability is recommended.
11. Handle fuel with care, as it is highly flammable.
12. Use approved fuel container, never add fuel to running engine or a hot engine.
13. Fill fuel tank outdoors with extreme care. Never fill fuel tank indoors. Replace fuel cap securely and wipe up spilled fuel.
14. Never allow anyone to operate the snow V-Blade until they have read the manual completely and are thoroughly familiar with basic skid steer and snow V-Blade operation.
15. Make sure the skid steer is counterweighted as recommended by your dealer. Weights provide the necessary balance to improve stability, traction and steering.
16. Always make sure all snow V-Blade components are properly installed and securely fastened BEFORE operation.
17. Always start the engine from the operator's seat with all the transmission lever(s) and snow V-Blade drive lever in neutral.
18. DO NOT bypass the safety system by shorting across the terminals of the starter motor to start the engine. This may cause the skid steer to move suddenly.
19. If the safety start system does not work, consult your dealer immediately.

During Operation

1. Do not allow passengers on the skid steer/snow V-Blade at any time. There is no safe place for passengers on the equipment. The operator MUST sit in the skid steer seat.
2. Eye and hearing protection is recommended when operating the snow V-Blade.
3. Operate only during daylight hours, or when the area is well lit with bright artificial light.
4. Park the skid steer/snow V-Blade on level ground, place the transmission in neutral, set the parking brake, disengage the Aux hydraulics, lower the equipment to the ground, place all control levers in neutral, shut off the engine and remove the ignition key BEFORE leaving the operator's seat.
5. Inspect the snow V-Blade after striking any foreign object to assure that all snow V-Blade parts are safe and secure and not damaged.
6. Be especially observant of the operating area and terrain. Watch for holes, rocks, or other hidden hazards. ALWAYS inspect the area prior to using the snow V-Blade.
7. DO NOT use the snow V-Blade near the edge of drop-offs or banks.
8. DO NOT use the snow V-Blade on steep slopes as overturn may result.
9. Operate up and down (not across) intermediate slopes. Avoid sudden starts and stops.
10. Drive skid steer backwards up steeper slopes.
11. Slow down before you change directions on any slope.
12. Use wheel weights on your skid steer to increase stability on slopes.
13. Never stand alongside of the unit while the engine is running.

Roll-Over Protective Structure (ROPS) During Operation

1. DO NOT weld, drill or alter the ROPS. Damaged ROPS must not be straightened or used. If damage does occur, consult your dealer.
2. If ROPS is lowered or removed from the skid steer for any reason, it must be erected and/or refitted immediately. Original bolts or equivalent replacements must be used and tightened to the correct torque.
3. Your dealer does not recommend usage of skid steer with ROPS removed.
4. Seat belt usage: With ROPS installed on the skid steer it is imperative that the seat belt be installed, used and correctly adjusted, at all times. DO NOT use a seat belt if operating without ROPS.
5. Keep all shields and covers in place. All skid steer and equipment shields and covers must be correctly installed at all times. When necessary to remove these, they must be reinstalled immediately.
6. Keep clear of all rotating driveline components. Be especially observant of implement areas of discharge, intake or other mechanical motion.
7. Securely lock equipment drive shaft. Check that all skid steer and equipment drivelines are in good working order.
8. Additional safety equipment: A fire extinguisher and first aid kit should be kept readily accessible.

MAINTENANCE

Always use genuine parts when replacement parts are required during operation.

1. Keep the skid steer and snow V-Blade properly maintained.

2. Park the skid steer/snow V-Blade on level ground, place the transmission in neutral, set the parking brake, disengage the Aux hydraulics, lower the equipment to the ground, place all control levers in neutral, shut off the engine and remove the ignition key and allow the rotating parts to stop BEFORE making any snow V-Blade adjustments.

3. To avoid injury, do not adjust or service the snow V-Blade with the skid steer engine running. Make sure moving components have completely stopped before leaving the operator's seat.

4. Keep the skid steer/snow V-Blade clean.

5. Always wear eye protection when cleaning or servicing the snow V-Blade.

6. Service the unit in safety: DO NOT service the skid steer while the engine is running or hot, or if the unit is in motion. Always lower snow V-Blade to the ground. If necessary to service unit with snow V-Blade raised, securely support with stands or suitable blocking before working underneath. Do not rely on hydraulically supported devices for your safety. They can settle suddenly, leak down, or be accidentally lowered.

7. Do not attempt to service machine, clear obstructions or unplug blockages with the engine running. Always shut off engine and allow all motion to cease.

8. The manufacturer will not claim responsibility for fitment of unapproved parts and/or accessories and any damages as a result of their use.

9. Make sure all shields and guards are securely in place following all service, cleaning, or repair work.

10. Do not modify or alter this equipment or any of its components or operating functions. If you have any questions concerning modifications, consult with your dealer.

11. Do not operate a unit which is defective or has missing parts. Make sure that all recommended maintenance procedures are completed before operating the unit.

12. Check all controls regularly and adjust where necessary.

13. Periodically check all nuts and bolts for tightness, especially wheel hub and rim nuts. Make sure all non-rotating pins are secured properly.

14. Check hydraulic cylinders and hoses for damage or leaks. To avoid serious personal injury: Escaping hydraulic/diesel fluid under pressure can penetrate the skin causing serious injuries. Do not use your hands to check for leaks. Use a piece of cardboard or paper to search for leaks.

15. Stop engine and relieve pressure before connecting lines. Tighten all connections before starting engine or pressurizing lines.

TRANSPORTING

1. Transporting on public roadway: When driving the skid steer and equipment on the road or highway under 25 mph, at night or during the day, use flashing amber warning lights and the Slow Moving Vehicle ("SMV") identification emblem.
2. Check local traffic codes that may apply to unit usage on public roads and highways in your area. The use of flashing amber lights is acceptable in most localities. However, some localities may prohibit their use.
3. Always disengage equipment drive prior to transporting unit.

STORAGE

Before storing the snow V-Blade, certain precautions should be taken to protect it from deterioration.

1. Clean the snow V-Blade throughout.
2. Make all the necessary repairs.
3. Replace all safety signs that are damaged, lost, or otherwise become illegible. If a part to be replaced has a sign on it, obtain a new safety sign from your dealer and install it in the same place as on the removed part.
4. Repaint all parts from which paint has worn or peeled.
5. When the snow V-Blade is dry, oil all moving parts. Apply oil liberally to all surfaces to protect against rust.
6. Store in a dry place

OPERATION

General Preparation

1. Read the operator's manual carefully before using the skid steer and snow V-Blade. Be thoroughly familiar with the controls and proper use of the equipment. Know how to stop the unit and disengage the controls quickly.
2. Wear appropriate outer garments while operating the equipment.
3. Make sure the V-Blade can operate freely.
4. Before engaging the snow V-Blade, always have the engine running at idle.

Engine Speed

1. Start the skid steer engine. Let the engine warm up at least one minute before engaging the drive mechanism then increase speed gradually.
2. Make sure the snow V-Blade is properly positioned and engage the drive mechanism.
3. Adjust the ground speed according to conditions.

Engaging the Drive Mechanism

Refer to the skid steer's operating manual for instructions.

SNOW V-Blade PARTS

Introduction

All parts are illustrated in Detailed Parts Diagram and Parts List sections which show the individual parts in the normal relationship to each other. Reference numbers are used in the illustrations. These numbers correspond to those in the "*Item No.*" column, and are followed by the description and quantity required.

The manufacturer reserves the right to change, modify, or eliminate from time to time, for technical or other reasons, certain or all data, specifications, or the product or products themselves, without any liability or obligation.

710-1-0001 V-BLADE

BASE ASSEMBLY PARTS BREAKDOWN

BASE ASSEMBLY

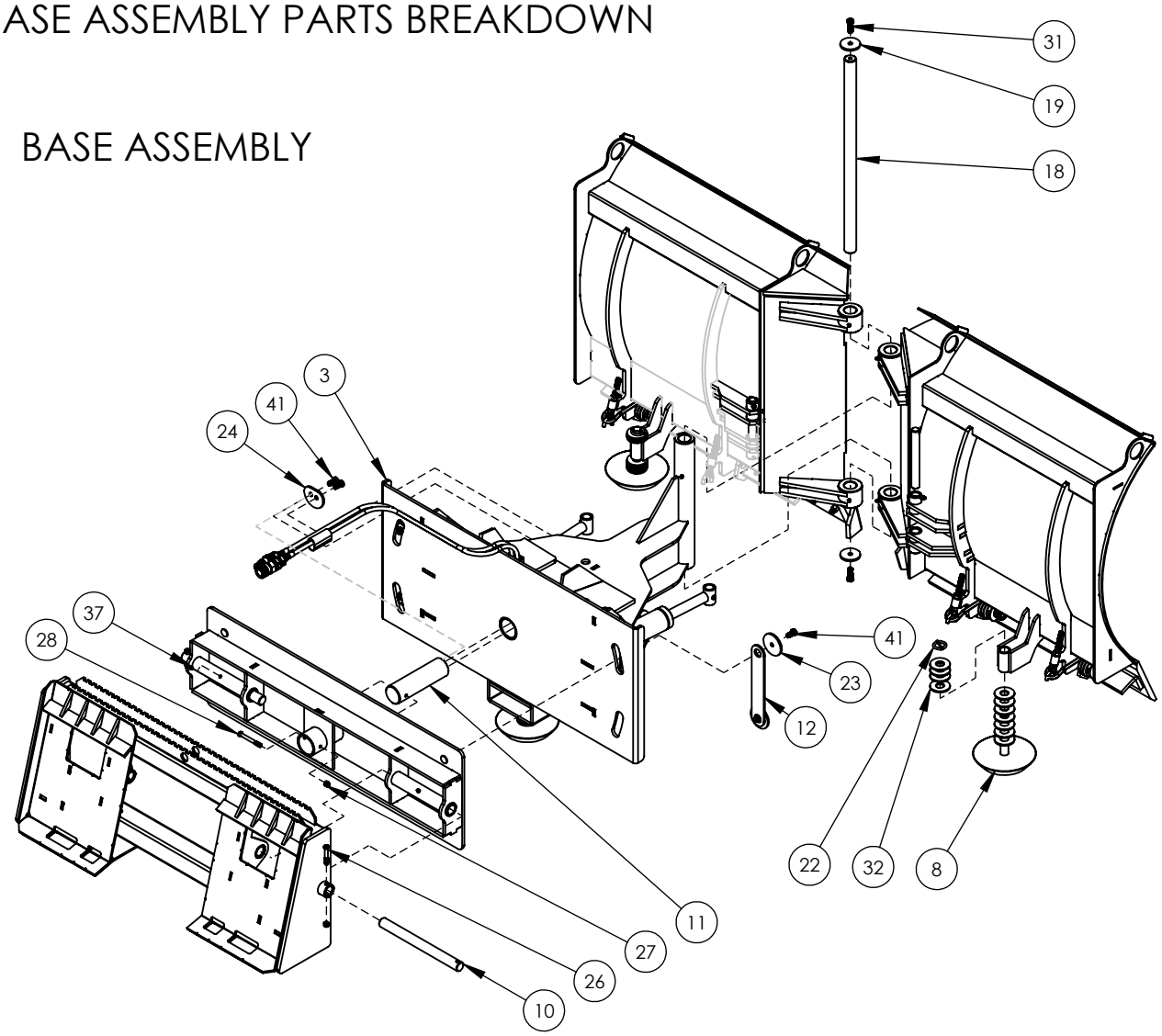

CYLINDER AND BLOCK

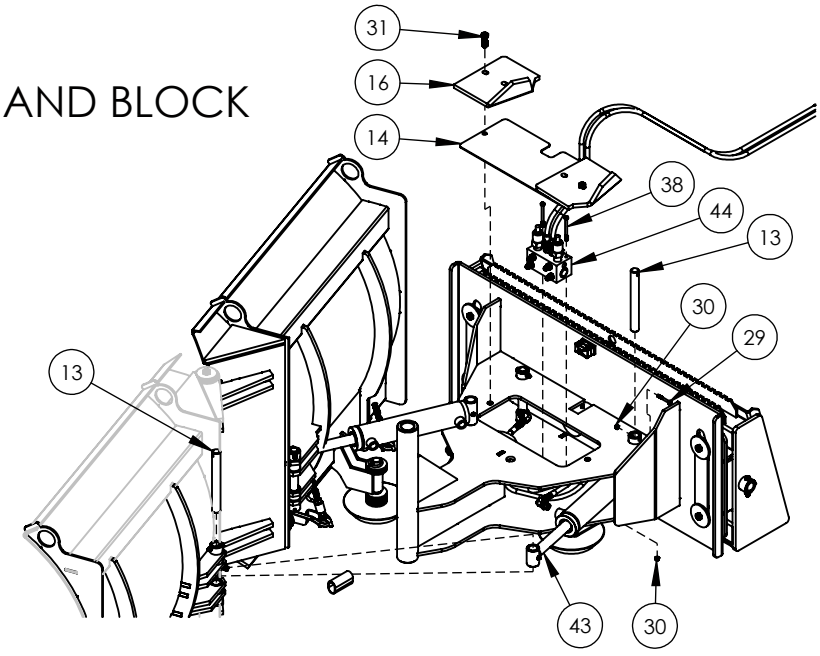

TRIP EDGE ASSEMBLY
PARTS BREAKDOWN

TRIP EDGE ASSEMBLY

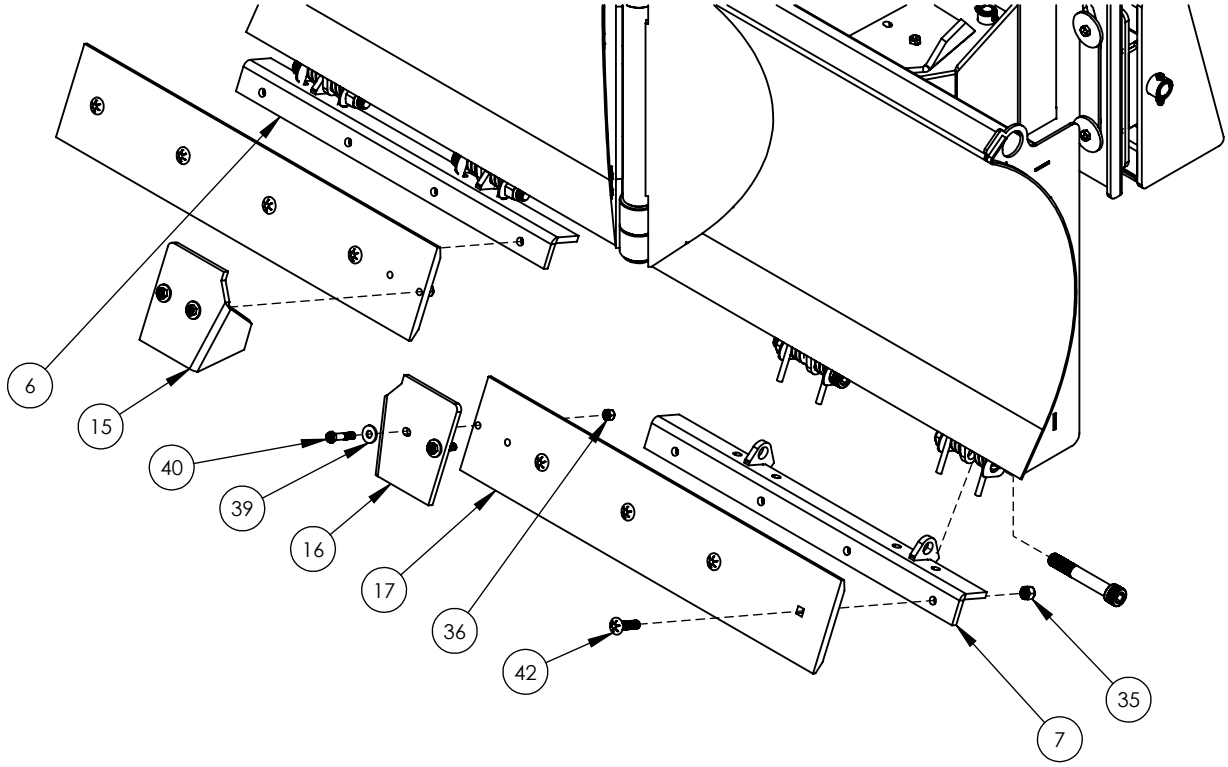

TRIP EDGE SPRING ASSEMBLY

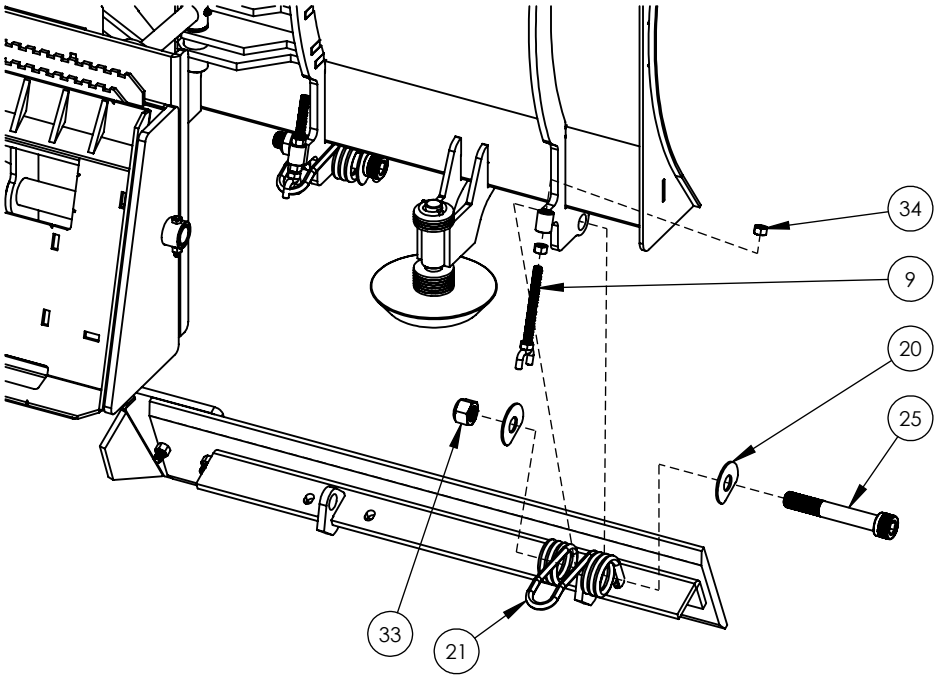

710-1-0001 V-BLADE
PARTS BREAKDOWN

ITEM NO.	PART NUMBER	DESCRIPTION	QTY.
1	AU-02-41000	QUICKTACH ASSEMBLY	1
2	AU-02-41001	PIVOT ASSEMBLY	1
3	AU-02-41002	BODY	1
4	*AU-02-41005-84	LEFT WING	1
5	*AU-02-41003-84	RIGHT SIDE WING	1
6	*AU-02-41004-84	RIGHT TRIP EDGE	1
7	*AU-02-41006-84	LEFT TRIP EDGE	1
8	AU-02-41010	FOOT, LARGE	3
9	AU-02-41011	SPRING BOLT	4
10	AU-03-41042	HORIZONTAL PIVOT PINS	2
11	AU-03-41040	QT PIVOT PIN	1
12	AU-03-41048	KEEPER PLATES	2
13	AU-03-41057	CYLINDER PIN	4
14	AU-03-41049	COVER	1
15	AU-03-41062	RIGHT BLADE SHOE	2
16	AU-03-41063	LEFT BLADE SHOE	2
17	*AU-03-41023-84	CUT EDGE	2
18	AU-03-41056	BLADE PIVOT PIN	1
19	AU-03-41059	WASHERS	2
20	AU-03-41076	WASHER	10
21	AU-03-41073	TORSION SPRING	5
22	670-3-0042	LINCH PIN, 3/16" DIAMETER, 1-1	3
23	612-3-0170	BLADE SHIPPING RETAINER WASHER	4
24	AU-03-41084	WASHER	1
25	HW-1-8X6.50 SHCS	BLACK-OXIDE ALLOY STEEL SHCS	5
26	HW-.375-16X2.5G5	3/8-16 X 2.50 GRADE 5 BOLT	2
27	HW-.375-16NYL	3/8 - 16 NYLOCK NUT	3
28	HW-.375-16X3.50G5	3/8"-16 X 3 1/2" GRADE 5 BOLT	1
29	HW-.25-20X2.0G5	1/4 X 2.00 BOLT	4
30	HW-.25-20NYL	1/4"-20 NYLOCK NUT	6
31	HW-.500-13X1.50G5	1/2"-13X1 1/2"	4
32	HW-1.0FW	1 FLAT WASHER USS ZINC	33
33	HW-1-8NYLG8	1"-8 GRADE 8 NYLOCK NUT	5
34	HW-.500-13NUT	1/2"-13 HEX NUT G5	8
35	HW-.625-11NYL	5/8"-11 NYLOCK NUT	8
36	HW-.500-13NYL	1/2-13 NYLOCK NUT ZINC	4
37	HW-.125-NPTSGF	GREASE ZERK	9
38	HW-.25-20X3.25G5	1/4"-20X3.25 GRADE 5	2
39	HW-.500FW	1/2" FLAT WASHER	4
40	HW-.500-13X2.50G8	1/2"-13 X 2 1/2" GRADE 8 BOLT	4
41	HW-.500-13X1.00G5	1/2"-13X1" GRADE 5 BOLT	6
42	HW-.625-11X2.5CBG8	5/8"-11X2-1/2" CARRIAGE BOLT G8	8
43	657-02-0010	2.5 X 10 CYLINDER	2
44	AU-02-41007-ASM	ASSEMBLED SEQUENCE BLOCK	1

*PART NUMBER CHANGES WITH DIFFERENT WIDTH MODELS

710-1-0001 V-BLADE
HYDRAULICS BREAKDOWN

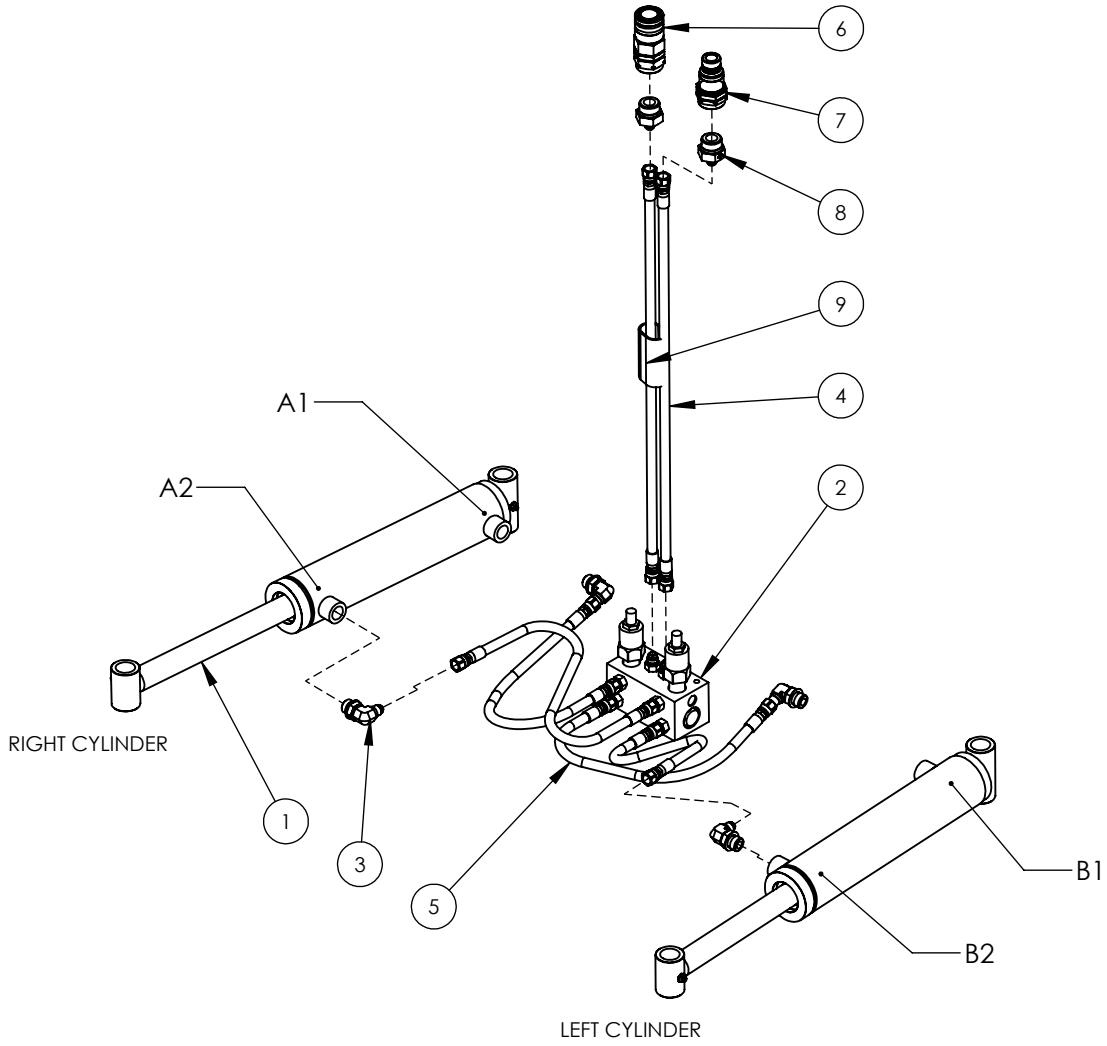

ITEM NO.	PART NUMBER	DESCRIPTION	QTY.
1	657-02-0010	2.5 X 10 CYLINDER	2
2	AU-02-41007-ASM	ASSEMBLED SEQUENCE BLOCK	1
3	H250-FT2062-8-6S	8 MORB X 6MJIC 90DEG	4
4	AU-03-0511	60.00" HOSE	2
5	AU-03-0510	18.25" HOSE	4
6	AU-03-9990-12-12	1/2" FEMALE COUPLER	1
7	AU-03-9991-12-12	1/2" MALE COUPLER	1
8	H375-FT21-6-12	6MJIC-12MORB	2
9	HSL250	.250" HOSE SLEEVE	1

710-1-0001
DECAL LOCATIONS

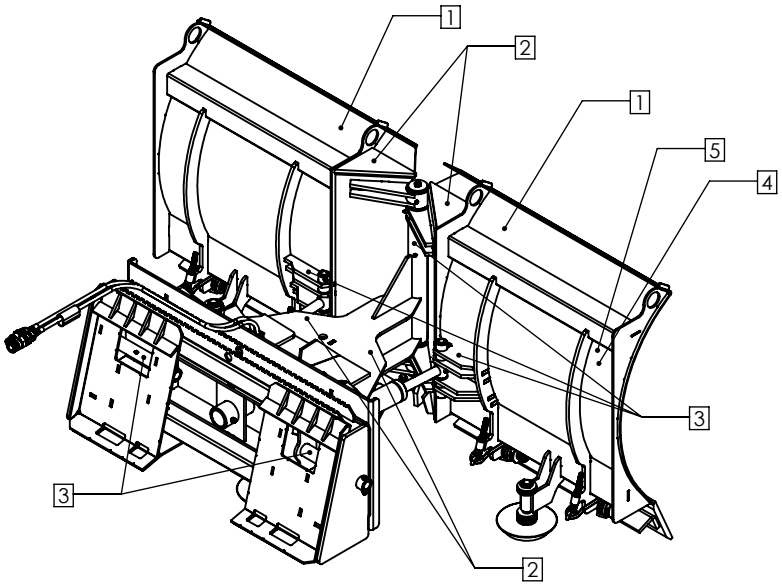

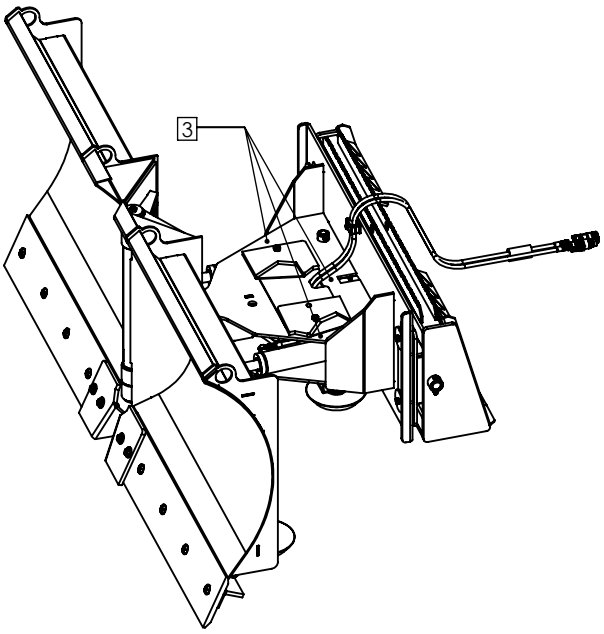

DECAL NO.	PART NUMBER	DESCRIPTION	QTY
1	DECAL-3-0005	2.50X10 "SKID PRO" CLEAR BACKI	2
2	DECAL-3-0015	DANGER KEEP HANDS CLEAR DECAL	4
3	DECAL-3-0019	"GREASE DAILY" .75X2	8
4	*DECAL-3-0035	84" SILVER	1
5	DECAL-3-0124	710-1-0001 SERIAL DECAL	1

*PART NUMBER CHANGES WITH DIFFERENT WIDTH MODELS

SKID PRO ATTACHMENT WARRANTY

Skid Pro warrants above attachments for twenty-four months from date of shipment, to the original owner. Warranty covers products to be free from defects in material and workmanship when properly set up and operated in accordance with Skid Pro's recommendations.

WARRANTY CLAIM PROCEDURE

All warranty claims must be submitted within the manufacturer's limited warranty period. Pictures and/or a video of the failing component(s) are required to properly document all potential warranty claims. To submit a warranty claim, contact your Skid Pro Product Guru or complete a Warranty Claim Form on our website and send it along with supporting pictures/video to sales@skidpro.com. Upon receipt, the warranty claim information will be reviewed and once determined to be a valid claim, a return authorization number will be issued for the return of the defective part(s) if applicable and replacement part(s) will be shipped. If it is determined the defective parts are to be returned and they are not received by Skid Pro within 30 days of receiving the replacement parts, the Buyer will be charged for the cost of the replacement parts plus any shipping charges. Tampering with the failed part (i.e. disassembling a motor or cylinder) will void the warranty.

EXCLUSIONS OF WARRANTY

Skid Pro's requirement for any issue with respect to attachments shall be limited to repairing or replacing the defective part, as this is a parts-only warranty and does not include any labor to replace or install the part or downtime from resulting issue. Skid Pro has full technical support & assistance to assure customer replaces the part properly for optimal performance on attachment.

This warranty shall not apply to any attachment's wear items, or attachments that have been repaired or altered outside the Skid Pro factory in any way, or that has been subject to misuse, negligence or accident beyond Skid Pro's recommended use and/or machine rated capacity.

This warranty is exclusive and in lieu of all other warranties and conditions. Skid Pro disclaims all other warranties and conditions, express or implied, including any implied warranties or conditions of merchantability or fitness for a particular purpose. In no event shall Skid Pro be liable for any special, incidental, indirect or consequential damage, whatsoever, including, but not limited to, loss or interruption of business, lost profits, or loss of machine use, whether based on contract, warranty, tort, negligence, strict liability, statute or otherwise, even if Skid Pro has been advised of the possibility of such damages.

No agent, employee, or representative of Skid Pro has any authority to bind said company to any affirmation, representation, or warranty concerning its machinery and/or attachments except as specifically set forth herein. Any disagreement or dispute of warranty policy or customer expectations of product, soundness, functionality, or performance would take place in Douglas County, Alexandria, MN, where Skid Pro operates.



PO BOX 982
Alexandria, MN 56308

Phone: 877-378-4642
FAX: 320-759-1057
www.skidpro.com
sales@skidpro.com